NOTES:

Materials: SST. corrosion–resistant, Non Magnetic 303, per ASTM A484 and A582. Beryllium Copper per ASTM–B–196, QQ–C–530 Oxide–Noryl (tm), MIL–P–46129

Finish: Center Conductors and solder components shall be plated per MIL–G–45204 Type II, Class 1 over Nickel plate per QQ–N–290. Body and Body components shall be passivated per ASTM A380.

Frequency: DC–18 GHz

VSWR: 1.15 TO 18 GHz

Insertion Loss: $.05\sqrt{\text{Frequency}}$

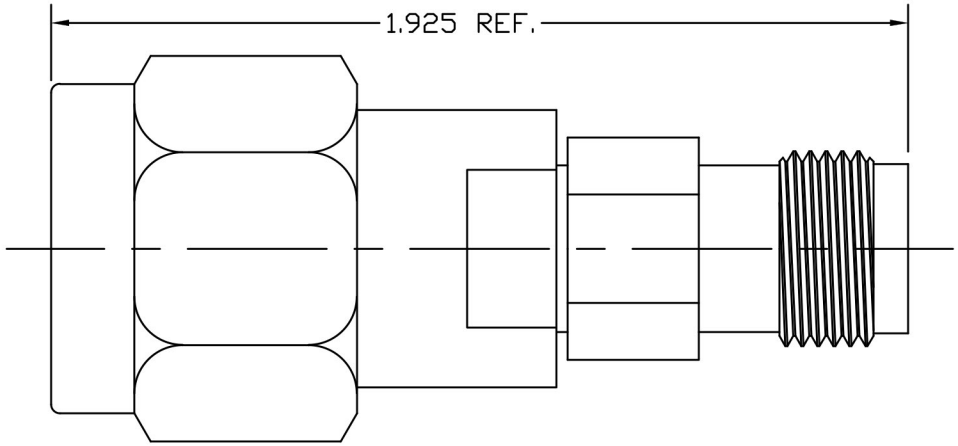

LTR	DESCRIPTION	DATE	APPR.
–	REL	5/11	

DRAWN *LMW* | CHECKED

APPR. | SCALE

UNLESS OTHERWISE SPECIFIED:
1. REMOVE ALL BURRS
2. BREAK ALL CORNERS & EDGES .005 R. MAX
3. CHAMFER 1st & LAST THREADS 45°
4. SURFACE FINISHED 32√ UNLESS OTHERWISE SPECIFIED.
5. DIAMETERS ON COMMON CENTERS TO BE CONCENTRIC WITHIN .002 T.I.R.
6. ALL DIMENSIONS ARE AFTER PLATING.

DIMENSIONS ARE IN INCHES
TOLERANCES

DECIMALS		FRACTIONAL	ANGULAR	
.X	±.030	± 1/64	.X°	±1°0′
.XX	±.010		.X°X′	±15′
.XXX	+.005			

HASCO, INC
COMPONENTS DISTRIBUTOR
5214 Bonsai Street, Moorpark, CA 93021
(888) 498-3242 • www.hasco-inc.com

MATERIAL

FINISH

TITLE
N PLUG TO TNC JACK

SIZE	FSCM NO.	SHEET	DWG. NO.
A	0T8L4	1	NP-TNCJ