REVISIONS				
REV	DESCRIPTION	ECO #	DATE	APPROVED
A	DELETED 40-60dB VIEW	14-100	03/20/14	T. KUHN

SPECIFICATIONS:

FREQUENCY RANGE: DC - 18GHz

ATTENUATION: SEE TABLE
ATTENUATION DEV. TOL.: SEE TABLE
VSWR (MAX.): (1-40 dB) 1.15:1 (DC - 4 GHz)
1.25:1 (4 - 12.4 GHz)
1.35:1* (12.4 - 18 GHz)
50 & 60 dB <1.45 (15 GHz-18 GHz)
POWER (AVG): 5 WATTS CW
DERATES LINEARLY FROM 25°C TO 10% @125°c
(PEAK): 500 WATTS MAX.
@5 µSEC PULSE WIDTH x 0.25% DUTY CYCLE
IMPEDANCE(NOM.): 50 OHMS

DASH NO.	NOM. DB	MAX. DEV.	DASH NO.	NOM. DB	MAX. DEV.
-01	1	±.3	-10	10	±.5
-02	2	±.3	-11	11	±.5
-03	3	±.3	-12	12	±.5
-04	4	±.3	-15	15	±.5
-05	5	±.3	-20	20	±.5
-06	6	±.3	-30	30	±.75
-07	7	±.5	-40	40	±1.25
-08	8	±.5			
-09	9	±.5			

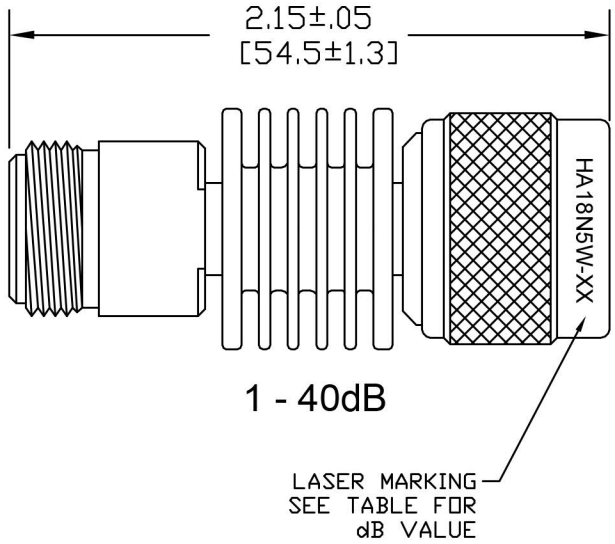

NOTES:
1. MATERIALS (COMPLY WITH MIL-DTL-3933 AND MIL-PRF-39012):
CENTER CONDUCTOR: BERYLLIUM COPPER PER QQ-C-530, ASTM B196, ASTM-B197 ALLOYS C17200 OR C17300 PER MIL-PRF-39012
OUTER CONDUCTOR: STAINLESS STEEL PER ASTM A484 & A582, CLASS 303, COND. A.
HOUSING/HEAT SINK: ALUMINUM (May be one of several QQ-A-XXX or ASTM standards)
DIELECTRIC: TEFLON PER ASTM D1710.
RESISTOR SUBSTRATE AIN OR ALUMINA CERAMIC,
2. FINISH: (COMPLY WITH MIL-DTL-3933 AND MIL-PRF-39012):
CENTER CONDUCTOR: GOLD PER ASTM-B488 AND MIL-PRF-39012
OUTER CONDUCTOR: PASSIVATED PER ASTM A380. AND MIL-PRF-39012
HOUSING: BLACK ANODIZE
RESISTOR: PROPRIETARY THIN FILM HYBRID W/ PROTECTIVE COATING
3. ENVIRONMENTAL CAPABILITIES AND DESIGN COMPLY WITH MIL-DTL-3933 FOR CLASS IV DEVICES (SOME PARAMETERS COMPLY WITH TYPE III OR BETTER).
4. MARKING INSTRUCTIONS
PART LOOKS LIKE PRODUCT IMAGE ABOVE.
PART MARKING ORIENTATION AND FORMAT AS SHOWN.
MARKING TO BE AS LARGE AS POSSIBLE BE, CLEAR, READABLE.
TEXT HEIGHT .050" IS SUGGESTED ONLY, FIT AS DEPICTED OR CONTACT XMA FOR CLARIFICATION.

DRAWING PRACTICES PER ANSI-Y-14.5 MIL-STD-100 & 1000
DIMENSIONS ARE IN INCHES AND APPLY BEFORE/AFTER PROCESSING
SURFACE ROUGHNESS (INCHES) 63
FINISH: SEE NOTES
MATERIAL: SEE NOTES
NOTE: THIS DRAWING INCORPORATES THIRD ANGLE PROJECTION.
INTERPRET IAW ANSI Y14.5-1982

UNLESS OTHERWISE SPECIFIED TOLERANCES IN:

DECIMALS	INCH	MMO
.XX"	.050"	[1.27]
.XX"	.030"	[.76]
.XXX"	.010	[.25]

ANGLES ±0°30'
REMOVE ALL BURRS/SHARP W/ BREAK / R OF .003" TO .0005"
UNLESS OTHERWISE NOTED DIAS CONCENTRIC < .003 T.I.R.

DO NOT SCALE PRINT

DRAWN D. SAUNDERS DATE
CHECKED DATE
ENG APPR. D. SAUNDERS DATE

THESE DRAWINGS AND SPECIFICATIONS ARE THE PROPERTY OF HASCO COMPONENTS AND SHALL NOT BE REPRODUCED, COPIED NOR USED - IN WHOLE OR IN PART - AS A BASIS FOR THE MANUFACTURE OR SALE OF OTHER ITEMS WITHOUT THE EXPRESS WRITTEN PERMISSION OF HASCO COMPONENTS

HASCO, INC
COMPONENTS DISTRIBUTOR
5214 Bonsai Street
Moorpark, CA
(888) 498-3242
www.hasco-inc.com

TITLE
ATTENUATOR, 5 WATT
TYPE N, DC-18 GHz

SIZE	CAGE CODE	DRAWING NUMBER	REV
C	0T8L4	HA18N5W-XX	A

SCALE 3:1 PLATED AREA SQ. IN XXX SHEET 1 OF 1

TEMPLATE REV -