DWG No.:

91K60830

NOTE: Information herein is believed by Southwest Microwave, Inc. to be accurate. However, Southwest Microwave assumes no responsibility for any omissions or errors or inaccuracies for its use or for any infringements of patents or other rights of third parties that may result from its use. Data is intended for informational purpose only and does not constitute a contract of sale or any express or implied warranty, including any warranty of merchant ability or fitness for a particular purpose.

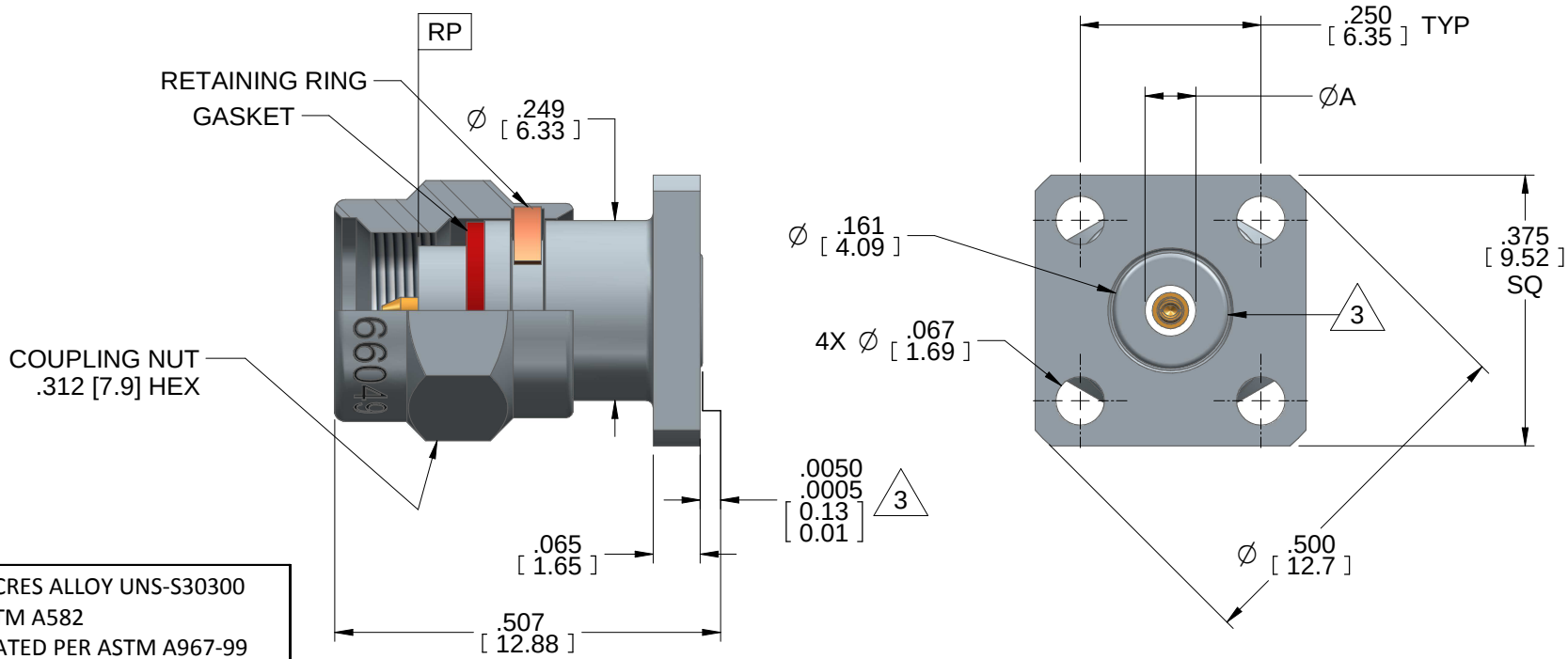

HOUSING AND COUPLING NUT:	STEEL, CRES ALLOY UNS-S30300 PER ASTM A582 PASSIVATED PER ASTM A967-99
CONTACT:	BeCu UNS-C17300 PER ASTM B196 GOLD PLATE PER MIL-DTL-45204
BEAD:	KEL-F (PCTFE) PER ASTM D1430
CAPTURE BEAD:	ULTEM 1000 PER ASTM D5205
RETAINING RING:	BeCu UNS-C17200 PER ASTM B194 OR ASTM B197
GASKET:	SILICONE RUBBER PER ZZ-R-765
ITEM	MATERIAL & FINISH

Model	Pin Size	Max. Pin Depth	Ø A
1011-15SF	.020	.065	.0705
1011-11SF	.012	.060	.0483
1011-09SF	.009	.065	.0431

3. 360°RAISED METAL GROUNDING RING.
2. SEE DOCUMENT NO. 91K60836 FOR PRODUCT SPECIFICATIONS.
1. ALL DIMENSIONS ARE IN INCHES. ALL ANGLES ARE IN DEGREES. DIMENSIONS SHOWN IN BRACKETS [XXX] ARE IN MILLIMETERS.

NOTES: UNLESS OTHERWISE SPECIFIED.

REV		APRVD.	DATE:
A	RELEASED	PLC	7/25/12

SOUTHWEST MICROWAVE

Southwest Microwave, Inc.
9055 South McKemy Street
Tempe, Arizona 85284-2946
Telephone (480) 783-0201
Fax (480) 783-0360

TITLE

2.92 Plug (Male) .375" Square Flange

DRN BY:	DATE:	DWG. NO.	REV.
EAG	5/30/12	91K60830	A

SHEET: 1 OF 1